	Technical Service Bulletin	Group
		20 - Engine Mechanical
		Number
		99-20-004
Subject		Date
1996-2000 1.8L AND 2.0L ELANTRA/TIBURON ENGINE PARTS CHANGES		12-1999
		Model
		Elantra *1996-2000 and* ***Tiburon*** *1997-2000*

1996 - 2000 1.8L and 2.0L elantra / Tiburon engine parts changes?
description:
Several component changes have been made that apply to the 1.8L and 2.0L engines used in the 1996 - 2000 Elantra and Tiburon. These changes involve the following parts:

1. Crankshaft

2. Flywheel and Flex Plate and Mounting Parts

service information:
CRANKSHAFT

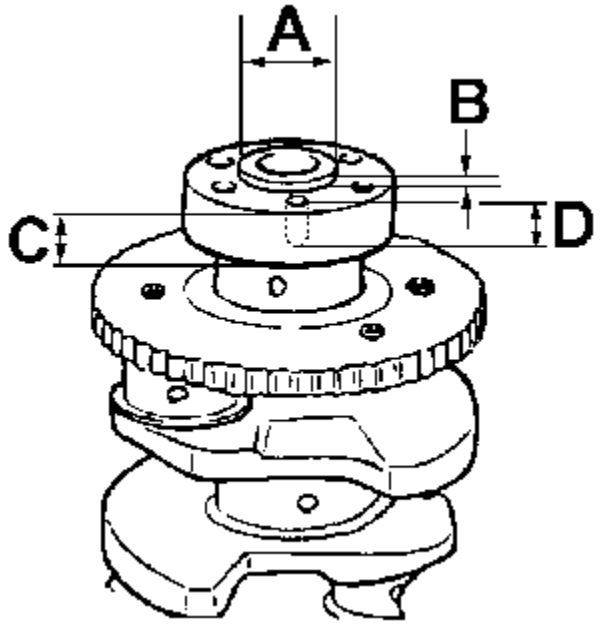

The new **crankshafts** (P/N 23110-23710 for the 2.0L); P/N 23110-23510 for the 1.8L) released July 8, 1999 have the following dimensional changes.
A. The flywheel mounting flange (pilot) diameter has been reduced from 41 mm to 35 mm.
B. The flywheel mounting flange (pilot) height has been increased from 4 mm to 6.5 mm.
C. The crankshaft rear flange thickness has been reduced from 20.5 mm to 18 mm.
D. The crankshaft rear flange bolt hole depth has been reduced from 15 mm (? 1.5mm) to 12.5 mm (? 1.5 mm).
NOTE
The new crankshafts are **not interchangable** with the previous ones. However, a crankshaft spacer (P/N 23112-23900) can be attached to the new crankshafts to **make them interchangeable** with the older crankshafts.

FLYWHEEL AND FLEX PLATE

The flywheel and flex plate assemblies have been changed to fit the new crankshaft. The new flywheel and flex plate assemblies **are not backward compatible** with the older crankshaft. However, the older flywheel and flex plate can be **made interchangeable** by mounting a crankshaft spacer (P/N 23112-23900) onto the new style crankshaft.

A. The flywheel and flex plate assembly pilot bore diameter has been reduced from 41 mm to 35 mm.

B. The flywheel pilot bore depth has been increased from 5.0 mm to 7.5 mm. Dimension B is recessed.

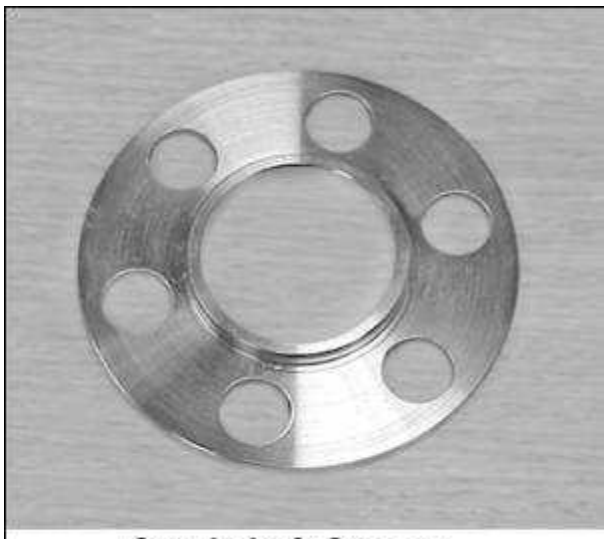

Crankshaft Spacer
P/N 23112-23900

MOUNTING HARDWARE: FLYWHEEL AND FLEXPLATE

Each crankshaft and flywheel / flexplate combination necessitates that specific mounting bolts to the crankshaft are used. Tables 1 and 2 identify the different combinations for manual and automatic tranaxles.

NOTE

Crankshaft P/N 23110-23710 for the 2.0L is part of Short Block Sub-Assembly P/N 21102-23C01. Also, crankshaft P/N 23110-23510 for the 1.8L is part of Short Block Sub-Assembly P/N 21102-23B01. These short blocks also require the use of Tables 1 and 2.

Table 1: Manual Transaxle

Crankshaft	**Flywheel**	**Spacer**	**Flywheel Mounting Bolt**
New	**Old**	**New**	**Old**
23110-23510 (1.8L)	23200-23010 (1.8L)	23112-23900	23311-23000
23110-23710 (2.0L)	23200-23210 (2.0L)	23112-23900	23311-23000
Old	**Old**	**N/A**	**Old**
23110-23030 (1.8L)	23200-23010 (1.8L)	N/A	23311-23000
23110-23220 (2.0L)	23200-23210 (2.0L)	N/A	23311-23000
New	**New**	**N/A**	**New**
23110-23510 (1.8L)	UNAVAILABLE	N/A	UNAVAILABLE
23110-23710 (2.0L)	23200-23700 (2.0L)	N/A	23311-23000

Table 2: Automatic Transaxle

Crankshaft	**Drive Plate (Flexplate)**	**Spacer**	**Adapter Plate (2)**	**Drive Plate Mounting Bolts**

New	Old	New	Old	Old
23110-23510 (1.8L)	23211-32650	23112-23900	23226-32600	23311-26050
23110-23710 (2.0L)	23211-32650	23112-23900	23226-32600	23311-26050
Old	**Old**	**N/A**	**Old**	**Old**
23110-23030 (1.8L)	23211-32650	N/A	23226-32600	23311-26050
23110-23220 (2.0L)	23211-32650	N/A	23226-32600	23311-26050
New	**New**	**N/A**	**New**	**New**
23110-23510 (1.8L)	23211-23060	N/A	23226-23550	23311-23550
23110-23710 (2.0L)	23211-23060	N/A	23226-23550	23311-23550

INTERCHANGEABILITY: See Below
Old to New = NO
New to Old = Only with spacer/adapter! See tables for details.